INOMAX

Product data sheet

Characteristics

MAX500-PV-4055 Solar pump inverter
MAX500-PV 55KW/75HP - 380V

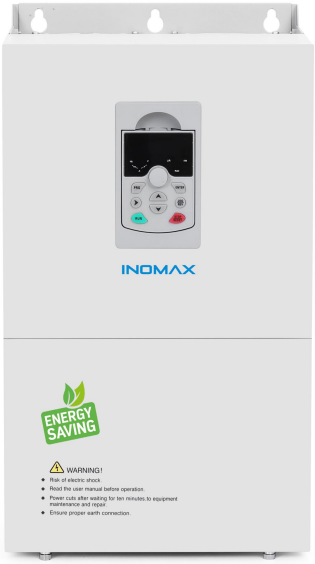

Main Feature

Component name	MAX500-PV-4055
Product or component type	Solar pump inverter
Inverter power kW	55 kW at 380...480 V 3 phases
Inverter power hp	75 hp at 380...480 V 3 phases
match pumps power	55KW/75HP pump (pump distance to iverter less than 70 meters)
match pumps power	45KW/60HP pump (pump distance to iverter more than 70 meters)
MPPT efficiency	≥99%
Power supply voltage	DC250V-900/AC 380...480 V
Recommended input mppt voltage	530V
Max inputDC voltage	900 V (in order to get longer life time of inverter,better no more than 850V)
Out put voltage	AC 380V-480V
Network number of phases	3 phases
Input current	< 220A
Nominal output current	110A
Solar panels configration	Power can be 1.2-1.5 times than pump related power,total VMP more than 530V,total VOC less than 850V
EMC C3 filter	Integrated
Assembly style	With heat sink
Speed drive output fre quency	0.1...500 Hz
Ambienttemperature range	-10 °C~55 °C, derating if the temperatureis above 40 °C
Protection degree	IP21
Weight (KG)	20
Product Dimension (mm)	453*275*235

Support Both Ac and DC input at the same time, when AC power not enough ,DC power will do compentsation.

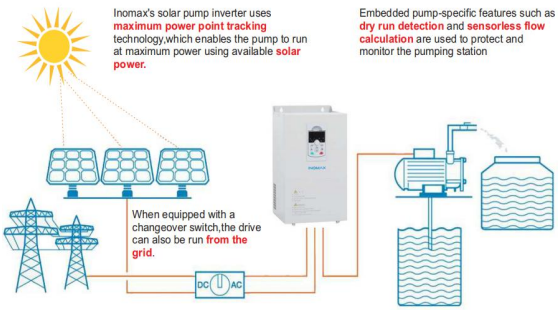

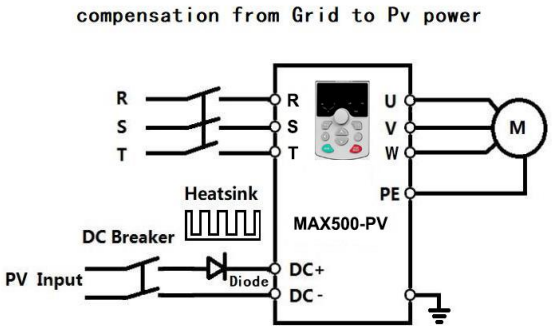
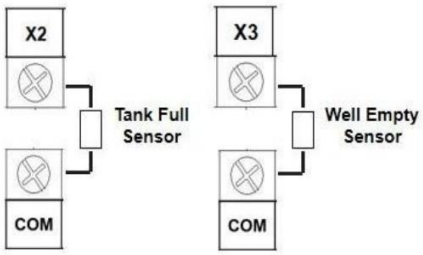
for dry run protection or stop when tank is full , no need do any parameters ,just do connection as below is OK